ATS

Frascold open type screw compressors

for refrigeration, air conditioning, heat pumps

富士豪开启式螺杆压缩机

用于制冷、空调和热泵

ATS SERIES
ATS系列

Frascold ATS open type screw compressors range has been designed to meet reliability, flexibility and efficiency. The range consists of 16 models , covering not only a wide capacity but also an extremely various range of applications.
富士豪ATS开启式螺杆压缩机系列的设计能够满足可靠性、灵活性和效率要求。
这一系列压缩机包含16个型号，不仅容量范围广泛，而且涵盖的应用范围极其广泛。

Designed to work with ammonia, hydrocarbons, traditional HFC, HCFC and new refrigerants with low GWP.
High cooling capacity, with or without economizer.
Universal application, marine/industrial refrigeration, process cooling, heat pumps and even air conditioning and ATEX zones.
Designed to work in parallel compounds by means of an external oil separator.
According to the working conditions it is possible to identify two main configurations for assuring the highest efficiency:
采用氨、碳氢化合物、传统HFC、HCFC和具有低全球变暖潜值的新制冷剂。
冷却能力强（有无经济器）
广泛应用、海上/工业制冷、工艺冷却、热泵，甚至是空调和防爆指令区域。
专门通过外部油分离器与化合物同时使用。
根据具体的工作条件，可以识别两个主要配置，以确保最高效率。

ATSH: suitable for low compression ratios (medium evaporating temperatures).
ATSL: suitable for high compression ratios (low evaporating temperatures).
ATSH：适合用于低压缩率（中等蒸发温度）
ATSL：适合用于高压缩率（低蒸发温度）

All models are characterized by:
所有型号都具有以下特征：

High precision
精确度高

Bearings with a high degree of rigidity and operating precision, resistant to the combination of radial and axial loads, resistant to operation with R717 (NH3). Innovative bearings configuration protects screws from any counter-rotations which could occur during system shut-down.

具有高度坚固性和工作精确度的轴承，能够经受纵向和横向负荷，能够与R717(NH3)一同使用。创新轴承配置保护螺杆不受系统停机过程中发生的反向旋转的影响。

Easy installation and accessibility
容易安装和维护

Compact design, with reduced overall dimensions and ease of installation.

外形小巧，总体尺寸缩小，容易安装。

High flexibility
灵活度高

Universal application: R717 (NH3) R134a, R404A, R507A, R407A, R407F, R22. Prepared for operation with economizer.

广泛应用：R717 (NH3) R134a , R404A, R507A, R407A, R407F, R22, 能够与节热器一同使用。

High performances
高性能

Asymmetrical screw profiles with optimised dimensions to guarantee higher performances.

非对称螺杆型面，优化尺寸，保证更高性能。

Coupling
耦合

Direct coupling with the motor.

直接与电机耦合

Noise level
噪音水平

Low noise level and no vibrations.

噪音低，无振动

Maintenance
维护

Mechanics conceived for safe operation with long operative intervals without maintenance.

专为安全运行而设计的机械机构，运行周期长，无需维护。

Long operative life
使用寿命长

Bearings designed for this compressor with special cage that reduce noise and grant an higher load resistance and longer operative life.

轴承专门为该压缩机设计，采用专用保持架，降低噪音并且提高负载阻抗和使用寿命。

EXTENT OF DELIVERY
交货范围

Standard supply
标准供应

Suction and discharge bush - Check valve on discharge line - Built in safety valve - Capacity control - Holding charge (nitrogen)
吸气和排气套管—排气端的止回阀—内置安全阀—能量调节—保护充注（氮）

Optional accessories

Coupling joint and coupling protective housing for IEC standard motors
Coupling joint and protective coupling, unmachined on motor side
Discharge valve; suction valve; valve for ECO
Air oil cooler; water oil cooler
Oil separator; oil injection kit; oil shut off valve
Oil filter clogging sensor optical or electronic

用于IEC标准电机的联轴器和联轴器保护壳电机侧未进行机械加工的联轴器和联轴器保护壳；
吸气阀；排气阀，ECO阀，
风冷油冷；水冷油冷；油分；
喷油组件；油路截止阀；
油滤堵塞检测开关
（光电式和电子式）

Optional accessories R717

Coupling joint and coupling protective housing for IEC standard motors
Coupling joint and protective coupling, unmachined on motor side
Discharge valve; suction valve
Valve for ECO
Oil separator; oil injection kit
Oil shut off valve

用于IEC标准电机的联轴器和联轴器保护壳电机侧未进行机械加工的联轴器和联轴器保护壳；
吸气阀；排气阀，ECO阀，
油分离器；喷油组件；油路截止阀

MODEL DESIGNATION
型号名称

Compressor
压缩机

ATS H 1 120

Family series 系列	
Open Screw Compressor 开启式螺杆压缩机	
Application range 应用范围	
H	Medium evaporating temperature 中等蒸发温度
L	Low evaporating temperature 低蒸发温度
Release 发布	
Product Release 产品发布	
Displacement 排量	
m^3/h at 2900 rpm 转速下	

TECHNICAL DATA
技术数据

Compressor 压缩机 (1)	Displacement 排量 (m3/h)		Weight 重量	Connections 接头						Step capacity control 能量调节段级	Speed 速度
				Suction / 吸入直径		Discharge / 排放直径		Economizer 节热器			
	2900 rpm	3500 rpm	kg	ø mm	inches	ø mm	inches	ø mm	inches	%	rpm
ATSH1-120	120	144	155	54	2" ⅛	42	1" ⅝	22	7/8"	100 - 50	1450 <> 4500
ATSL1-120	120	144	155	54	2" ⅛	42	1" ⅝	22	7/8"	100 - 50	
ATSH1-150	150	180	160	54	2" ⅛	42	1" ⅝	22	7/8"	100 - 50	
ATSL1-150	150	180	160	54	2" ⅛	42	1" ⅝	22	7/8"	100 - 50	
ATSH1-186 (*)	186	223	200	80	3" ⅛	54	2" ⅛	22	7/8"	100 - 50	
ATSL1-186 (*)	186	223	200	80	3" ⅛	54	2" ⅛	22	7/8"	100 - 50	
ATSH1-210 (*)	210	252	205	80	3" ⅛	54	2" ⅛	22	7/8"	100 - 50	
ATSL1-210 (*)	210	252	205	80	3" ⅛	54	2" ⅛	22	7/8"	100 - 50	
ATSH1-240	240	288	240	80	3" ⅛	54	2" ⅛	22	7/8"	100 - 75 - 50	
ATSL1-240	240	288	240	80	3" ⅛	54	2" ⅛	22	7/8"	100 - 75 - 50	
ATSH1-270	270	324	250	80	3" ⅛	54	2" ⅛	22	7/8"	100 - 75 - 50	
ATSL1-270	270	324	250	80	3" ⅛	54	2" ⅛	22	7/8"	100 - 75 - 50	
ATSH1-300	300	360	295	80	3" ⅛	67	2" ⅝	22	7/8"	100 - 75 - 50	
ATSL1-300	300	360	295	80	3" ⅛	67	2" ⅝	22	7/8"	100 - 75 - 50	
ATSH1-360	360	432	310	80	3" ⅛	67	2" ⅝	22	7/8"	100 - 75 - 50	
ATSL1-360	360	432	310	80	3" ⅛	67	2" ⅝	22	7/8"	100 - 75 - 50	

(1) Clockwise rotation; **(*)** End of 2014
顺时针旋转，（*）2014年末。

R717

Compressor 压缩机	Condensing temperature 冷凝温度 °C	Qo (kW) / Pe (kW) 50Hz	Cooling capacity 制冷量 / Power consumption 功耗 — Evaporating temperature °C 蒸发温度（摄氏度） 10	5	0	-5	-10	-15	-20
ATSH1 - 120	30	Qo	165.6	138.6	115.0	94.4	76.6	61.4	48.4
		Pe	26.0	24.2	22.5	20.8	19.4	18.1	17.1
	40	Qo	157.0	131.0	108.3	88.5	71.3	56.6	44.1
		Pe	30.7	28.7	26.8	25.0	23.4	21.9	20.8
	50	Qo	146.3	121.6	99.9	81.2	64.9		
		Pe	35.4	33.5	31.6	29.8	28.2		
ATSH1 - 150	30	Qo	224.0	187.5	154.3	124.7	98.8	76.7	58.7
		Pe	29.6	28.5	27.6	26.9	26.3	25.8	25.4
	40	Qo	211.0	174.7	142.1	113.2	88.3	67.4	50.8
		Pe	36.3	35.0	33.9	33.0	32.2	31.5	30.9
	50	Qo	192.1	156.8	125.3	97.9	74.6		
		Pe	45.1	43.5	42.2	40.9	39.8		
ATSH1 - 240	30	Qo	348.5	289.3	238.8	195.8	159.4	128.3	101.6
		Pe	50.8	46.8	43.7	41.1	38.9	36.7	34.4
	40	Qo	324.9	269.1	221.4	180.8	146.1	116.3	90
		Pe	59.8	55.8	52.4	49.5	46.8	44.2	41.26
	50	Qo	300.9	248.2	203.1	164.5	131.4		
		Pe	70.9	66.4	62.5	59.0	55.6		
ATSH1 - 270	30	Qo	395.6	328.5	271.1	222.4	181.1	145.8	115.4
		Pe	57.3	53.3	49.8	46.7	44.0	41.4	39.0
	40	Qo	367.6	304.9	251.2	205.3	166.1	132.1	102.3
		Pe	68.3	63.8	59.8	56.2	53.0	50.1	47.5
	50	Qo	339.7	281.0	230.5	187.1	149.5		
		Pe	81.2	75.9	71.2	67.1	63.4		
ATSH1 - 300	30	Qo	426.7	354.3	291.3	236.9	190.3	150.7	117.2
		Pe	58.4	56.3	54.3	52.4	50.5	48.7	46.9
	40	Qo	393.4	324.9	265.5	214.3	170.5	133.3	101.8
		Pe	71.6	69.1	66.8	64.6	62.5	60.6	58.8
	50	Qo	355.7	291.4	235.9	188.2	147.5		
		Pe	87.1	84.1	81.4	78.8	76.5		
ATSH1 - 360	30	Qo	504.1	421.0	349.1	287.1	233.6	187.2	146.7
		Pe	68.4	66.3	63.8	61.2	58.8	56.7	55.2
	40	Qo	477.2	395.6	325.1	264.5	212.5	167.5	128.4
		Pe	85.8	82.1	78.5	75.1	72.3	70.3	69.4
	50	Qo	444.8	365.0	296.4	237.7	187.4		
		Pe	105.5	100.4	95.8	91.9	89.1		

Compressor 压缩机	Condensing temperature 冷凝温度 °C	Qo (kW) / Pe (kW) 50Hz	Cooling capacity 制冷量 / Power consumption 功耗 — Evaporating temperature °C 蒸发温度（摄氏度） -10	-15	-20	-25	-30	-35	-40
ATSL1 - 120	30	Qo	82.4	66.5	53.1	41.9	32.5	24.7	18.2
		Pe	23.3	21.1	19.0	17.1	15.4	13.8	12.4
	40	Qo	75.9	60.9	48.3	37.7	28.8	21.5	
		Pe	26.8	24.3	22.0	19.8	17.9	16.0	
	50	Qo	68.6	54.6	42.8	32.8	24.6		
		Pe	30.3	27.5	24.9	22.5	20.2		
ATSL1 - 150	30	Qo	106.6	87.0	69.7	54.5	41.4	30.5	21.6
		Pe	30.6	27.8	25.3	23.1	21.2	19.5	18.1
	40	Qo	100.8	80.9	63.4	48.3	35.7	25.4	
		Pe	35.1	32.1	29.4	27.0	24.8	22.9	
	50	Qo	91.7	72.0	55.0	40.7	29.1		
		Pe	40.5	37.2	34.2	31.5	29.1		
ATSL1 - 240	30	Qo	164.8	132.7	105.8	83.5	65.2	50.3	38.2
		Pe	49.1	43.5	38.8	34.8	31.5	28.6	26.0
	40	Qo	153.8	123.2	97.7	76.6	59.3	45.1	
		Pe	54.6	48.9	44.1	39.9	36.4	33.2	
	50	Qo	141.0	112.1	88.0	68.0	51.5		
		Pe	61.4	55.5	50.5	46.1	42.2		
ATSL1 - 270	30	Qo	187.7	150.7	119.9	94.5	73.7	56.8	43.1
		Pe	55.0	48.6	43.3	38,9	35.2	32.0	29.1
	40	Qo	175.1	140.0	110.8	86.7	67.0	50.9	
		Pe	61.2	54.7	49.3	44.7	40.7	37.1	
	50	Qo	160.7	127.4	99.8	77.0	58.3		
		Pe	69.2	62.4	56.7	51.7	47.3		
ATSL1 - 300	30	Qo	206.3	165.7	132.0	104.2	81.5	63.0	47.9
		Pe	61.3	54.1	48.2	43.3	39.2	35.7	32.5
	40	Qo	192.2	154.0	122.2	96.0	74.4	56.6	
		Pe	68.1	61.0	55.0	49.9	45.5	41.5	
	50	Qo	176.3	140.2	110.1	85.0	64.2		
		Pe	76.5	69.3	63.0	57.5	52.5		
ATSL1 - 360	30	Qo	249.4	199.5	158.5	125.0	97.8	75.8	57.6
		Pe	74.4	65.3	57.9	52.0	47.2	43.1	39.2
	40	Qo	230.9	184.6	146.4	115.1	89.5	68.2	
		Pe	82.1	73.2	65.9	59.9	54.7	50.0	
	50	Qo	211.4	168.0	132.1	102.3	77.5		
		Pe	92.3	83.3	75.8	69.3	63.5		

Performance data refereted to 5K suction superheat, 0K liquid subcooling.
性能数据基于5K吸入过热，0K液体过冷。

R717

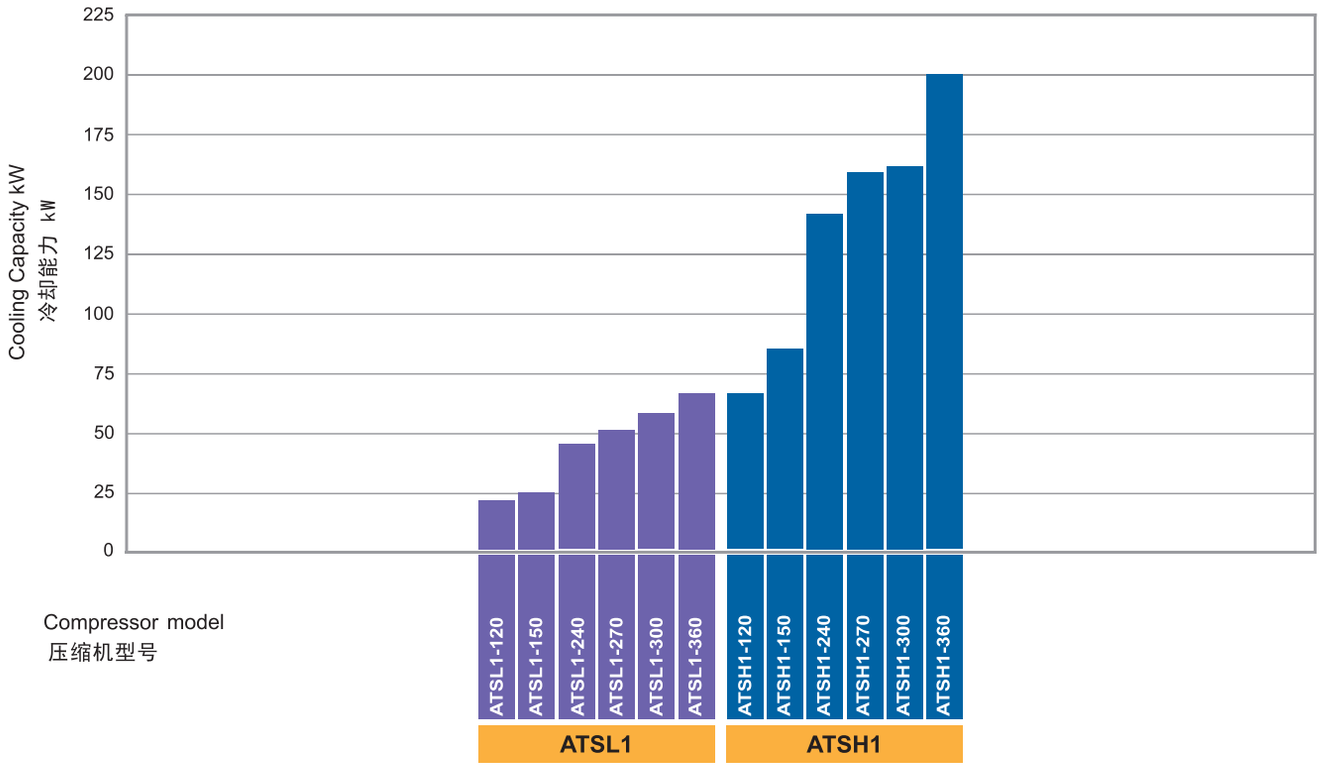

ATSL1: -35°C evaporating temperature; 40°C condensing temperature; 5K superheat; 0K liquid subcooling.
ATSH1: -10°C evaporating temperature; 45°C condensing temperature; 5K superheat; 0K liquid subcooling.
ATSL1：-35℃蒸发温度，40℃冷凝温度，5K吸气过热，0K液体过冷。
ATSH1：-10℃蒸发温度，45℃冷凝温度，5K吸气过热，0K液体过冷。

Working limits
运行限制

ATSL1
R717

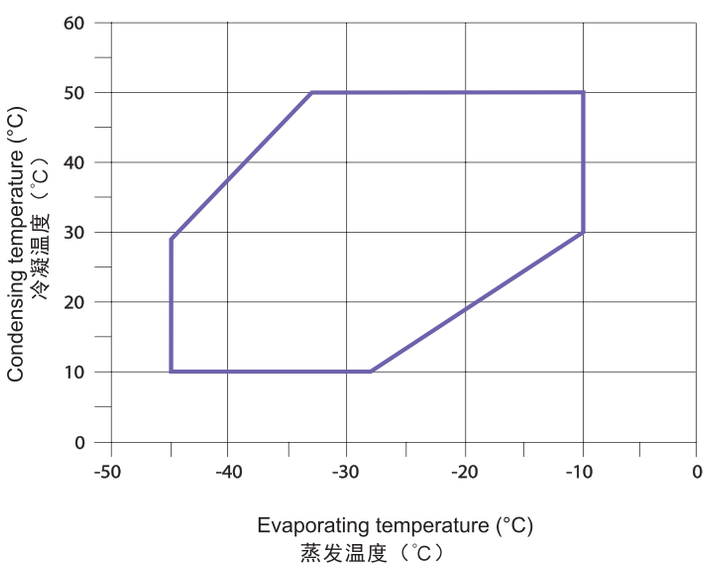

ATSH1
R717

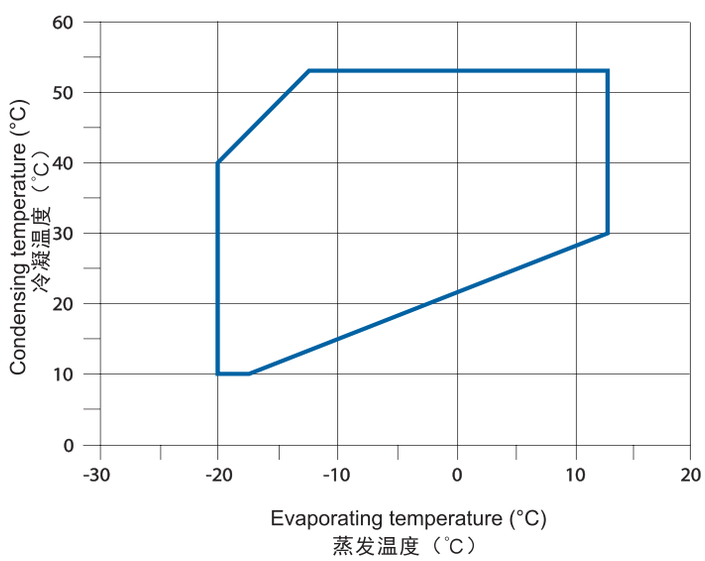

Full load operation (100%)
满负荷运行（100%）

Suction gas superheating 5K - 0K liquid subcooling.
Additional cooling may be required, see selection software.

5K吸气过热，0K液体过冷。
可能需要额外冷却，参见选择软件。

R404

Compressor 压缩机	Condensing temperature 冷凝温度 °C	Qo (kW) / Pe (kW) 50Hz	Cooling capacity 制冷量 / Power consumption 功耗 — Evaporating temperature °C 蒸发温度（摄氏度） 7.5	5	0	-5	-10	-15	-20
ATSH1 - 120	30	Qo	147.6	135.2	112.6	92.8	75.8	61.4	49.6
		Pe	23.6	23.0	22.2	21.6	21.1	20.7	20.1
	40	Qo	125.2	114.8	95.7	78.9	64.4	52.0	41.6
		Pe	27.1	26.8	26.5	26.2	25.9	25.4	24.6
	50	Qo	102.6	94.1	78.4	64.5	52.3	41.7	32.7
		Pe	32.6	32.6	32.5	32.3	31.9	31.2	29.9
ATSH1 - 150	30	Qo	197.9	180.0	148.6	122.4	100.4	81.8	65.6
		Pe	29.5	29.2	28.4	27.8	27.4	27.3	27.6
	40	Qo	170.5	154.8	127.2	104.4	85.4	69.2	55.0
		Pe	36.0	35.7	35.1	34.5	34.1	34.0	34.2
	50	Qo	141.9	128.2	104.6	85.2	69.1	55.5	43.3
		Pe	44.6	44.3	43.7	43.1	42.6	42.3	42.4
ATSH1 - 240	30	Qo	312.8	284.4	234.8	193.5	159.2	130.5	106.3
		Pe	50.1	48.1	45.1	43.1	41.9	41.1	40.3
	40	Qo	266.9	242.7	200.4	165.2	135.8	110.9	89.2
		Pe	56.4	54.7	52.1	50.5	49.5	48.8	48.1
	50	Qo	220.3	200.1	164.8	135.5	110.7	89.1	69.6
		Pe	65.5	64.0	61.7	60.3	59.4	58.7	57.9
ATSH1 - 270	30	Qo	353.0	320.4	264.0	217.6	179.5	147.9	120.9
		Pe	56.9	54.3	50.6	48.5	47.4	46.8	46.4
	40	Qo	301.4	273.5	225.3	185.8	153.2	125.7	101.4
		Pe	63.8	61.6	58.5	56.8	56.0	55.7	55.3
	50	Qo	249.1	225.7	185.4	152.4	124.9	101.1	79.1
		Pe	74.0	72.1	69.3	67.9	67.3	67.0	66.5
ATSH1 - 300	30	Qo	393.3	356.9	293.9	242.0	199.2	163.8	133.5
		Pe	62.2	61.0	58.6	56.5	54.7	53.2	52.0
	40	Qo	335.3	304.0	249.9	205.6	169.0	138.2	111.2
		Pe	71.6	70.5	68.5	66.6	65.0	63.6	62.6
	50	Qo	279.0	252.3	206.3	168.7	137.3	110.3	85.7
		Pe	84.7	83.9	82.3	80.9	79.8	78.8	78.2
ATSH1 - 360	30	Qo	470.7	427.4	352.2	290.5	239.7	197.6	161.6
		Pe	76.0	74.3	71.2	68.4	66.0	64.0	62.5
	40	Qo	402.3	364.9	300.3	247.4	203.9	167.2	135.1
		Pe	86.9	85.5	82.7	80.2	78.1	76.3	75.0
	50	Qo	334.3	302.5	247.8	203.2	166.2	134.4	105.4
		Pe	102.4	101.2	99.1	97.2	95.6	94.3	93.4

Compressor 压缩机	Condensing temperature 冷凝温度 °C	Qo (kW) / Pe (kW) 50Hz	Cooling capacity 冷却能力 / Power consumption 功耗 — Evaporating temperature °C 蒸发温度（摄氏度） -15	-20	-25	-30	-35	-40	-45	-50
ATSL1 - 120	30	Qo	63.3	51.3	41.1	32.6	25.6	19.7	14.8	10.5
		Pe	22.9	21.3	19.9	18.8	17.9	17.0	16.1	15.1
	40	Qo	54.0	43.4	34.5	27.2	21.2	16.1	11.9	8.1
		Pe	25.6	24.1	22.9	21.8	20.9	19.9	18.9	17.8
	50	Qo	44.1	35.0	27.5	21.3	16.3	12.1		
		Pe	29.2	27.9	26.7	25.6	24.6	23.5		
ATSL1 - 150	30	Qo	81.6	66.1	53.0	42.1	33.0	25.4	19.0	13.5
		Pe	28.1	26.1	24.5	23.1	21.9	20.8	19.7	18.6
	40	Qo	69.5	55.9	44.5	35.1	27.3	20.8	15.3	10.4
		Pe	31.4	29.6	28.1	26.8	25.6	24.4	23.2	21.8
	50	Qo	56.6	45.0	35.3	27.5	21.0	15.6		
		Pe	35.7	34.1	32.7	31.4	30.1	28.8		
ATSL1 - 240	30	Qo	132.6	107.5	86.3	68.6	53.7	41.4	31.1	22.30
		Pe	45.9	42.6	39.3	36.2	33.6	31.3	29.7	28.81
	40	Qo	113.4	91.5	73.2	57.9	45.2	34.6	25.8	18.08
		Pe	52.1	48.3	44.7	41.5	38.8	36.7	35.4	34.92
	50	Qo	92.5	73.9	58.4	45.7	35.2	26.5		
		Pe	60.1	55.8	52.0	48.7	46.1	44.3		
ATSL1 - 270	30	Qo	147.9	120.1	96.8	77.3	61.0	47.4	35.9	25.70
		Pe	51.6	47.2	43.4	40.1	37.3	35.2	33.5	32.44
	40	Qo	125.2	101.3	81.5	65.0	51.3	39.8	29.8	20.77
		Pe	57.9	53.1	49.1	45.7	43.1	41.1	39.9	39.37
	50	Qo	102.2	82.1	65.5	51.8	40.3	30.6		
		Pe	66.3	61.3	57.2	53.9	51.4	49.9		
ATSL1 - 300	30	Qo	162.3	132.3	107.0	85.7	67.9	52.8	39.8	28.3
		Pe	57.0	52.3	48.2	44.8	41.9	39.5	37.6	36.1
	40	Qo	136.4	111.0	89.7	72.0	57.1	44.3	33.1	22.8
		Pe	63.8	58.8	54.7	51.2	48.5	46.3	44.7	43.6
	50	Qo	111.7	90.3	72.5	57.7	45.1	34.2		
		Pe	73.3	68.2	64.0	60.6	58.0	56.2		
ATSL1 - 360	30	Qo	196.7	159.9	129.0	103.3	81.8	63.6	47.8	33.6
		Pe	68.3	62.8	58.0	53.9	50.4	47.4	44.8	42.5
	40	Qo	165.8	134.4	108.4	86.8	68.8	53.4	39.8	27.1
		Pe	76.7	70.9	66.0	61.8	58.3	55.5	53.2	51.4
	50	Qo	136.1	109.6	87.7	69.7	54.4	41.2		
		Pe	88.0	82.2	77.3	73.3	70.1	67.7		

Performance data refereted to 10K suction superheat, 0K liquid subcooling.
性能数据基于10K吸入过热，0K液体过冷。

R404

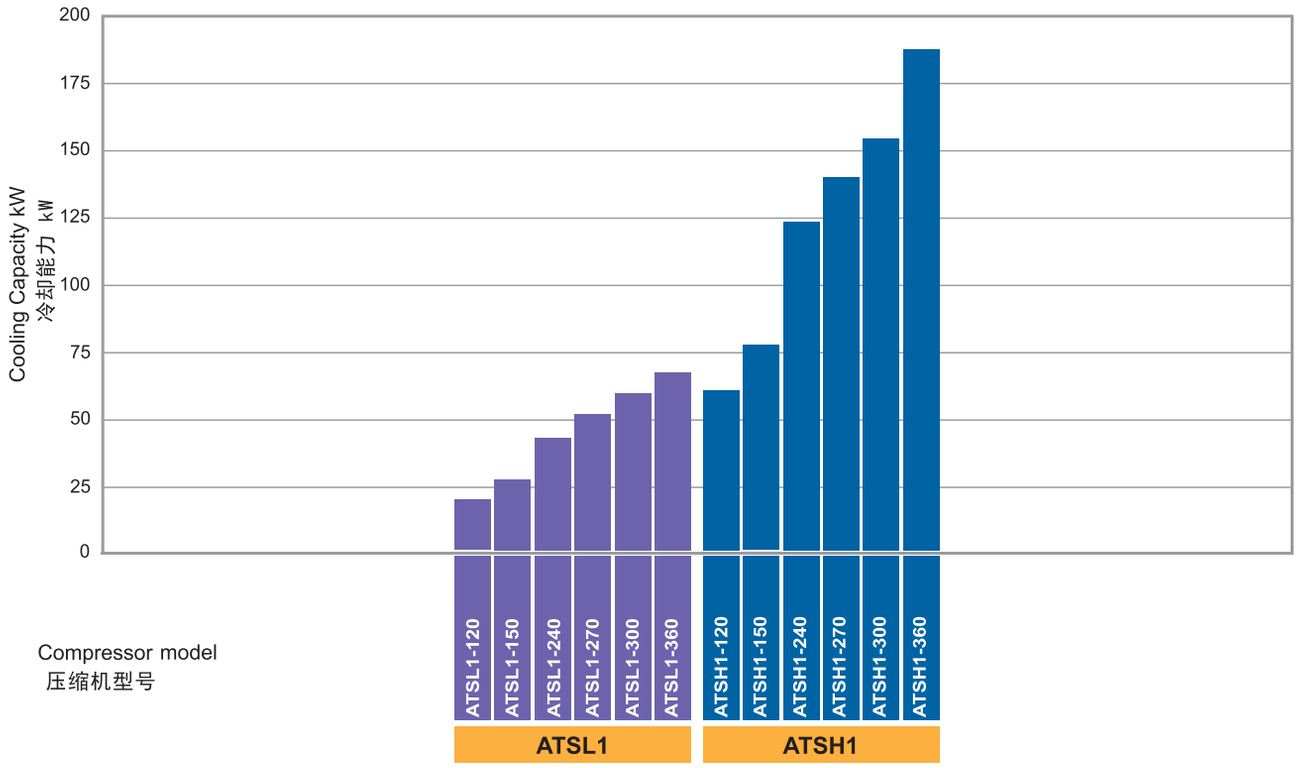

ATSL1: -35°C evaporating temperature; 40°C condensing temperature; 10K superheat; 0K liquid subcooling.
ATSH1: -10°C evaporating temperature; 45°C condensing temperature; 10K superheat; 0K liquid subcooling.
ATSL1：-35℃蒸发温度，40℃冷凝温度，10K吸气过热，0K液体过冷。
ATSH1：-10℃蒸发温度，45℃冷凝温度，10K吸气过热，0K液体过冷。

Working limits
运行限制

ATSL1
R404A

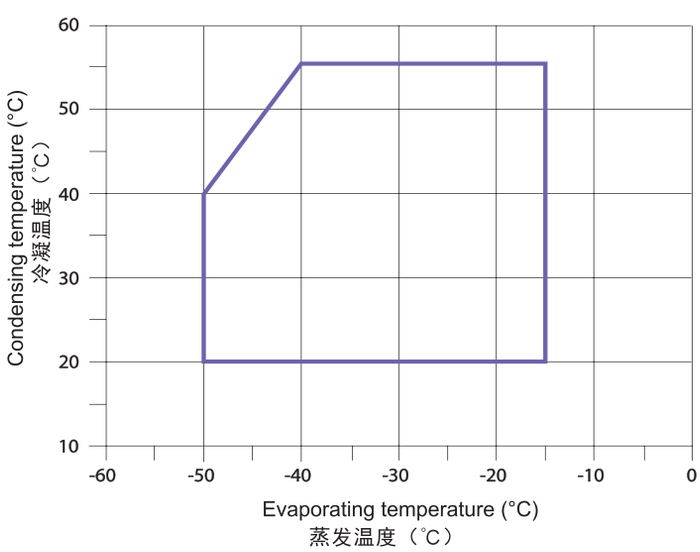

ATSH1
R404A

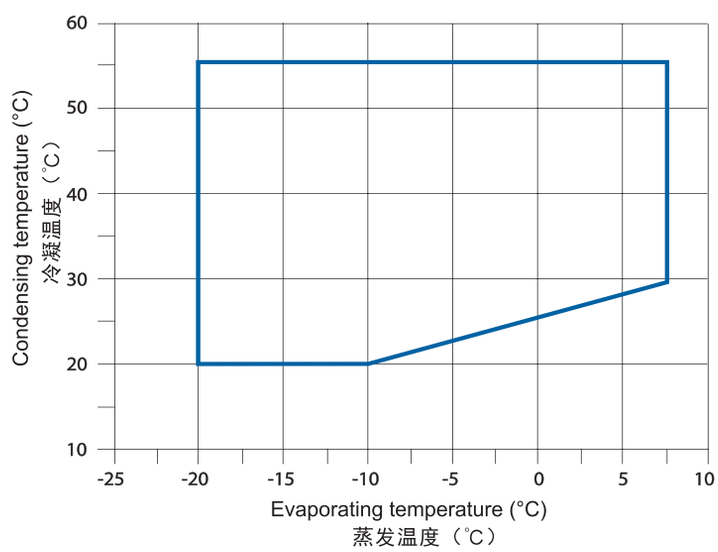

Full load operation (100%)
满负荷运行（100%）

Suction gas superheating 10K - 0K liquid subcooling.
Additional cooling may be required, see selection software.
10K吸气过热，0K液体过冷。
可能需要额外冷却，参见选择软件。

R134a

Compressor 压缩机	Condensing temperature 冷凝温度 °C	Qo (kW) / Pe (kW) 50Hz	Cooling capacity 制冷量 / Power consumption 功耗 — Evaporating temperature °C 蒸发温度（摄氏度） 20	15	10	5	0	-5	-10	-15	-20
ATSH1 - 120	30	Qo			105.0	87.3	72.0	58.9	47.6	37.9	29.65
		Pe			14.6	14.0	13.5	12.9	12.4	12.0	11.67
	40	Qo	134.9	113.5	94.9	78.7	64.7	52.7	42.3	33.5	25.85
		Pe	18.6	18.0	17.3	16.7	16.2	15.8	15.4	15.1	14.98
	50	Qo	119.8	100.4	83.5	68.9	56.4	45.7	36.4	28.5	21.7
		Pe	22.1	21.4	20.8	20.2	19.8	19.4	19.2	19.1	19.2
	60	Qo	103.4	86.1	71.1	58.3	47.3	38.0	30.0		
		Pe	26.1	25.3	24.7	24.2	23.9	23.7	23.6		
	70	Qo	85.8	70.7	57.8	46.8	37.6	29.8			
		Pe	30.3	29.6	29.1	28.7	28.5	28.4			
ATSH1 - 150	30	Qo			132.1	109.3	89.6	72.5	58.0	45.5	35.00
		Pe			16.9	16.2	15.6	15.2	14.9	14.7	14.69
	40	Qo	151.6	127.2	105.8	87.0	70.6	56.2	43.6	32.5	22.6
		Pe	26.1	25.6	25.2	24.9	24.6	24.4	24.2	24.1	24.0
	50	Qo	170.0	143.0	119.2	98.4	80.3	64.6	51.0	39.2	28.94
		Pe	21.6	20.9	20.3	19.8	19.4	19.1	18.9	18.8	18.70
	60	Qo	132.0	110.4	91.3	74.6	59.9	46.9	35.3		
		Pe	31.7	31.5	31.2	31.0	30.9	30.7	30.5		
	70	Qo	110.7	91.8	75.1	60.5	47.5	35.9			
		Pe	38.1	38.0	38.0	37.9	37.7	37.6			
ATSH1 - 240	30	Qo			213.7	177.0	145.3	118.2	95.1	75.8	59.51
		Pe			27.6	26.3	25.2	24.1	23.3	22.8	22.55
	40	Qo	276.3	231.7	192.9	159.2	130.2	105.5	84.5	66.7	51.76
		Pe	35.3	34.3	33.2	32.0	30.9	30.0	29.1	28.6	28.32
	50	Qo	247.5	206.9	171.6	141.1	114.9	92.6	73.7	57.7	44.1
		Pe	42.3	41.5	40.5	39.4	38.3	37.3	36.5	35.8	35.5
	60	Qo	218.3	181.6	149.9	122.7	99.4	79.6	62.9		
		Pe	51.1	50.3	49.3	48.3	47.2	46.1	45.2		
	70	Qo	188.6	156.0	128.0	104.1	83.8	66.7			
		Pe	61.5	60.7	59.7	58.6	57.5	56.3			
ATSH1 - 270	30	Qo			240.1	198.7	162.9	132.4	106.4	84.5	66.2
		Pe			30.9	29.4	28.1	27.0	26.1	25.4	25.0
	40	Qo	310.9	260.7	216.8	178.8	146.0	118.1	94.4	74.4	57.6
		Pe	40.1	38.7	37.3	35.9	34.7	33.6	32.6	31.9	31.4
	50	Qo	277.3	231.5	191.7	157.4	128.0	103.0	81.9	64.1	49.1
		Pe	47.9	46.5	45.2	43.9	42.7	41.5	40.5	39.7	39.1
	60	Qo	241.7	200.7	165.2	134.9	109.1	87.4	69.2		
		Pe	56.9	55.7	54.4	53.1	51.8	50.6	49.5		
	70	Qo	204.6	168.6	137.8	111.8	90.0	71.8			
		Pe	67.0	65.8	64.5	63.1	61.8	60.4			
ATSH1 - 300	30	Qo			271.4	224.3	183.4	148.3	118.8	94.7	75.66
		Pe			34.9	33.7	32.8	32.2	31.9	31.9	32.04
	40	Qo	348.7	293.7	244.7	201.7	164.2	132.1	105.1	83.0	65.5
		Pe	43.3	42.1	41.2	40.6	40.2	39.9	39.9	40.0	40.2
	50	Qo	310.5	260.5	216.2	177.2	143.4	114.4	90.1	70.2	54.3
		Pe	52.1	51.5	50.9	50.6	50.3	50.1	50.0	50.0	49.9
	60	Qo	269.4	224.7	185.1	150.5	120.4	94.8	73.3		
		Pe	65.0	64.5	64.0	63.6	63.2	62.8	62.4		
	70	Qo	224.9	185.7	151.0	120.8	94.7	72.6			
		Pe	81.8	81.2	80.5	79.8	78.9	78.0			
ATSH1 - 360	30	Qo			315.7	260.6	213.7	174.2	141.1	113.5	90.5
		Pe			39.1	39.4	39.2	38.5	37.5	36.4	35.2
	40	Qo	407.8	340.0	281.6	231.7	189.4	153.8	124.0	99.1	78.2
		Pe	49.7	49.6	49.2	48.3	47.3	46.2	45.1	44.3	43.7
	50	Qo	361.7	300.1	247.3	202.3	164.4	132.5	105.8	83.4	64.4
		Pe	62.6	61.2	59.6	58.0	56.5	55.3	54.5	54.2	54.6
	60	Qo	315.8	260.1	212.7	172.5	138.6	110.3	86.5		
		Pe	77.0	74.5	72.1	70.1	68.5	67.6	67.3		
	70	Qo	270.0	220.1	177.8	142.1	112.2	87.1			
		Pe	94.6	91.2	88.4	86.3	85.0	84.6			

Performance data refereted to 10K suction superheat, 0K liquid subcooling.

性能数据基于10K吸入过热，0K液体过冷。

R134a

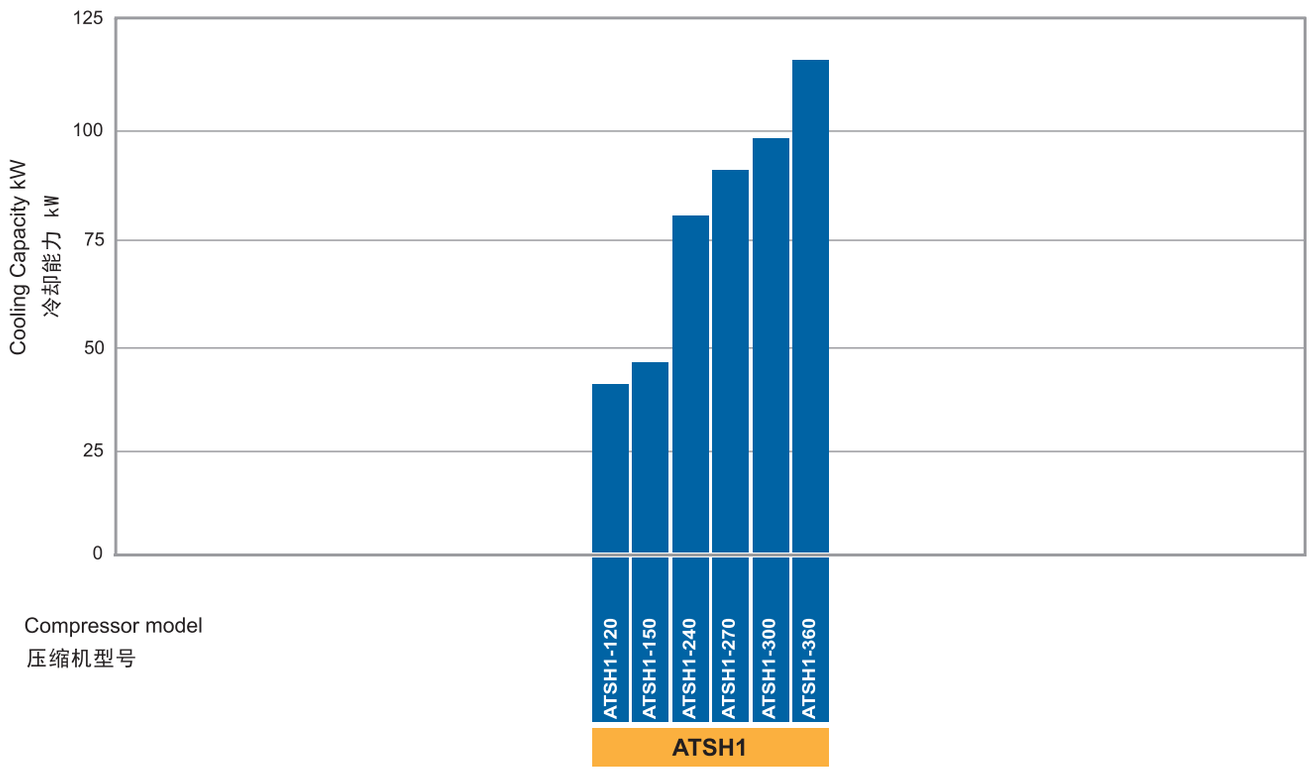

ATSH1: -10°C evaporating temperature; 45°C condensing temperature; 10K superheat; 0K liquid subcooling.

ATSH1： −10˚C蒸发温度，45˚C冷凝温度，10K吸气过热，0K液体过冷。

Working limits
运行限制
ATSH1
R134a

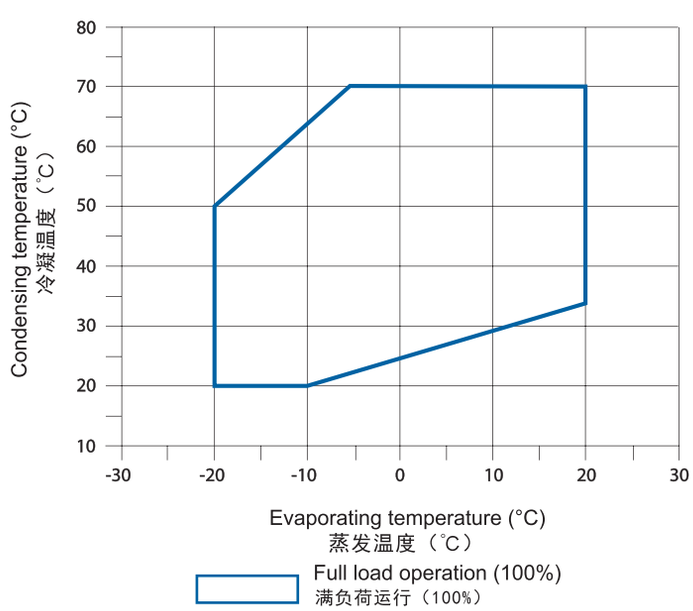

Suction gas superheating 5K - 0K liquid subcooling.
Additional cooling may be required, see selection software.

10K吸气过热，0K液体过冷。
可能需要额外冷却，参见选择软件。

R22

Compressor 压缩机	Condensing temperature 冷凝温度 °C	Qo (kW) / Pe (kW) 50Hz	Cooling capacity 制冷量 / Power consumption 功耗 — Evaporating temperature °C 蒸发温度（摄氏度） 12.5	10	5	0	-5	-10	-15	-20
ATSH1 - 120	30	Qo	162.6	150.7	128.8	109.3	92.1	77.0	63.8	52.45
		Pe	31.3	29.9	27.3	25.0	22.9	21.1	19.5	18.27
	40	Qo	149.0	137.9	117.5	99.5	83.5	69.6	57.5	47.06
		Pe	33.5	32.1	29.5	27.2	25.1	23.4	22.0	21.00
	50	Qo	134.3	124.1	105.2	88.6	74.0	61.3	50.3	40.87
		Pe	36.2	34.8	32.2	29.9	28.1	26.5	25.4	24.57
	60	Qo	118.3	108.9	91.7	76.6	63.4	52.0		
		Pe	39.6	38.2	35.7	33.6	31.9	30.5		
ATSH1 - 150	30	Qo	211.1	195.0	165.2	138.6	115.3	95.2	78.5	65.14
		Pe	25.7	25.4	24.7	24.1	23.6	23.1	22.9	22.81
	40	Qo	192.8	177.8	150.0	125.4	103.8	85.2	69.8	57.60
		Pe	31.0	30.7	30.1	29.5	29.0	28.6	28.4	28.36
	50	Qo	172.8	158.8	133.0	110.0	89.9	72.7	58.5	47.17
		Pe	37.2	37.0	36.6	36.2	35.9	35.7	35.6	35.73
	60	Qo	149.7	136.7	112.6	91.1	72.3	56.2		
		Pe	45.2	45.1	45.1	45.0	45.0	45.0		
ATSH1 - 240	30	Qo	342.7	316.6	268.3	225.1	187.2	154.6	127.6	106.19
		Pe	45.4	44.7	43.2	41.7	40.3	39.0	37.7	36.63
	40	Qo	314.9	290.6	245.5	205.2	169.8	139.5	114.4	94.59
		Pe	52.9	52.0	50.4	48.9	47.6	46.3	45.3	44.43
	50	Qo	282.0	259.7	218.3	181.3	148.9	121.3	98.5	80.74
		Pe	61.6	60.7	59.2	57.8	56.6	55.7	55.0	54.56
	60	Qo	244.5	224.3	187.0	153.8	124.9	100.3		
		Pe	72.6	71.9	70.5	69.4	68.6	68.1		
ATSH1 - 270	30	Qo	383.8	355.0	300.9	251.9	208.7	172.0	142.5	120.90
		Pe	50.3	49.5	48.0	46.5	45.1	43.7	42.3	40.95
	40	Qo	350.7	324.3	274.6	229.4	189.5	155.5	128.3	108.31
		Pe	58.4	57.5	55.9	54.4	53.1	51.9	50.8	49.84
	50	Qo	312.7	288.8	243.8	202.7	166.4	135.5	110.8	92.78
		Pe	68.3	67.4	65.8	64.4	63.3	62.4	61.8	61.35
	60	Qo	269.8	248.7	208.6	172.0	139.7	112.2		
		Pe	81.1	80.2	78.8	77.6	76.9	76.5		
ATSH1 - 300	30	Qo	430.2	397.2	337.0	283.9	237.5	197.0	162.1	131.97
		Pe	49.1	48.8	48.3	48.1	48.0	47.9	47.8	47.52
	40	Qo	394.8	364.0	307.8	258.3	215.0	177.3	144.6	116.48
		Pe	61.7	61.3	60.7	60.3	60.1	59.9	59.7	59.39
	50	Qo	354.7	326.0	273.8	227.9	187.7	152.8	122.4	96.15
		Pe	74.6	74.2	73.6	73.3	73.2	73.2	73.1	72.99
	60	Qo	307.7	281.2	233.0	190.6	153.6	121.4		
		Pe	88.0	87.7	87.4	87.4	87.6	87.9		
ATSH1 - 360	30	Qo	514.6	474.6	401.6	337.5	281.7	233.8	193.3	159.80
		Pe	60.2	59.6	58.5	57.6	56.9	56.5	56.3	56.35
	40	Qo	469.2	432.7	365.9	307.1	255.8	211.4	173.5	141.62
		Pe	74.8	74.2	73.1	72.2	71.5	71.0	70.6	70.53
	50	Qo	420.7	387.3	326.2	272.0	224.4	182.9	147.0	116.14
		Pe	90.5	90.0	89.0	88.2	87.5	86.9	86.6	86.39
	60	Qo	365.4	334.8	278.6	228.5	184.0	144.7		
		Pe	107.3	106.9	106.1	105.4	104.8	104.3		

Compressor 压缩机	Condensing temperature 冷凝温度 °C	Qo (kW) / Pe (kW) 50Hz	Cooling capacity 制冷量 / Power consumption 功耗 — Evaporating temperature °C 蒸发温度（摄氏度） -15	-20	-25	-30	-35	-40	-45	-50
ATSL1 - 120	30	Qo	64.3	52.4	42.3	33.8	26.7	20.8	15.8	11.5
		Pe	20.0	18.6	17.5	16.5	15.7	15.1	14.5	13.9
	40	Qo	58.0	46.9	37.6	29.9	23.4	18.0	13.5	9.5
		Pe	22.9	21.5	20.4	19.5	18.7	18.1	17.6	17.1
	50	Qo	50.7	40.7	32.3	25.4	19.6	14.9		
		Pe	26.5	25.1	24.0	23.1	22.3	21.8		
ATSL1 - 150	30	Qo	83.5	68.2	55.2	44.2	35.0	27.2	20.5	14.8
		Pe	26.3	25.2	24.3	23.5	22.7	22.0	21.2	20.3
	40	Qo	75.1	60.9	48.8	38.6	30.1	22.8	16.6	11.1
		Pe	30.9	30.1	29.4	28.7	28.0	27.1	26.2	25.1
	50	Qo	65.8	52.7	41.6	32.3	24.5	17.8		
		Pe	36.8	36.3	35.7	35.0	34.3	33.4		
ATSL1 - 240	30	Qo	129.1	104.9	84.5	67.5	53.4	41.8	32.3	24.27
		Pe	39.4	36.4	33.9	31.9	30.3	29.1	28.2	27.45
	40	Qo	117.6	94.9	75.9	60.1	47.2	36.6	27.9	20.63
		Pe	45.2	42.3	40.0	38.0	36.5	35.4	34.5	33.79
	50	Qo	105.0	83.8	66.2	51.7	40.0	30.4		
		Pe	52.7	49.8	47.5	45.6	44.1	42.9		
ATSL1 - 270	30	Qo	145.9	118.6	95.6	76.3	60.3	47.2	36.4	27.61
		Pe	45.0	41.2	38.2	35.8	33.9	32.5	31.3	30.35
	40	Qo	132.2	106.9	85.6	67.9	53.3	41.4	31.6	23.53
		Pe	51.8	48.0	45.0	42.7	40.8	39.4	38.3	37.33
	50	Qo	118.3	94.7	75.0	58.6	45.2	34.2		
		Pe	60.8	56.8	53.6	51.1	49.1	47.5		
ATSL1 - 300	30	Qo	162.6	131.0	104.9	83.6	66.3	52.3	40.8	31.0
		Pe	49.9	45.5	42.1	39.5	37.6	36.3	35.5	34.8
	40	Qo	147.5	118.1	94.0	74.5	58.7	45.9	35.4	26.5
		Pe	56.8	52.8	49.7	47.3	45.5	44.3	43.4	42.7
	50	Qo	131.9	104.6	82.3	64.3	49.8	38.1		
		Pe	66.4	62.5	59.3	56.9	55.0	53.5		
ATSL1 - 360	30	Qo	199.1	161.1	129.1	102.4	80.5	62.6	48.2	36.5
		Pe	60.4	55.6	51.6	48.3	45.7	43.6	42.1	40.9
	40	Qo	180.4	145.1	115.6	91.1	71.1	54.9	41.8	31.2
		Pe	68.9	64.5	60.8	57.7	55.2	53.1	51.3	49.9
	50	Qo	160.9	128.2	101.0	78.6	60.3	45.5		
		Pe	80.9	76.5	72.7	69.4	66.5	64.0		

R22

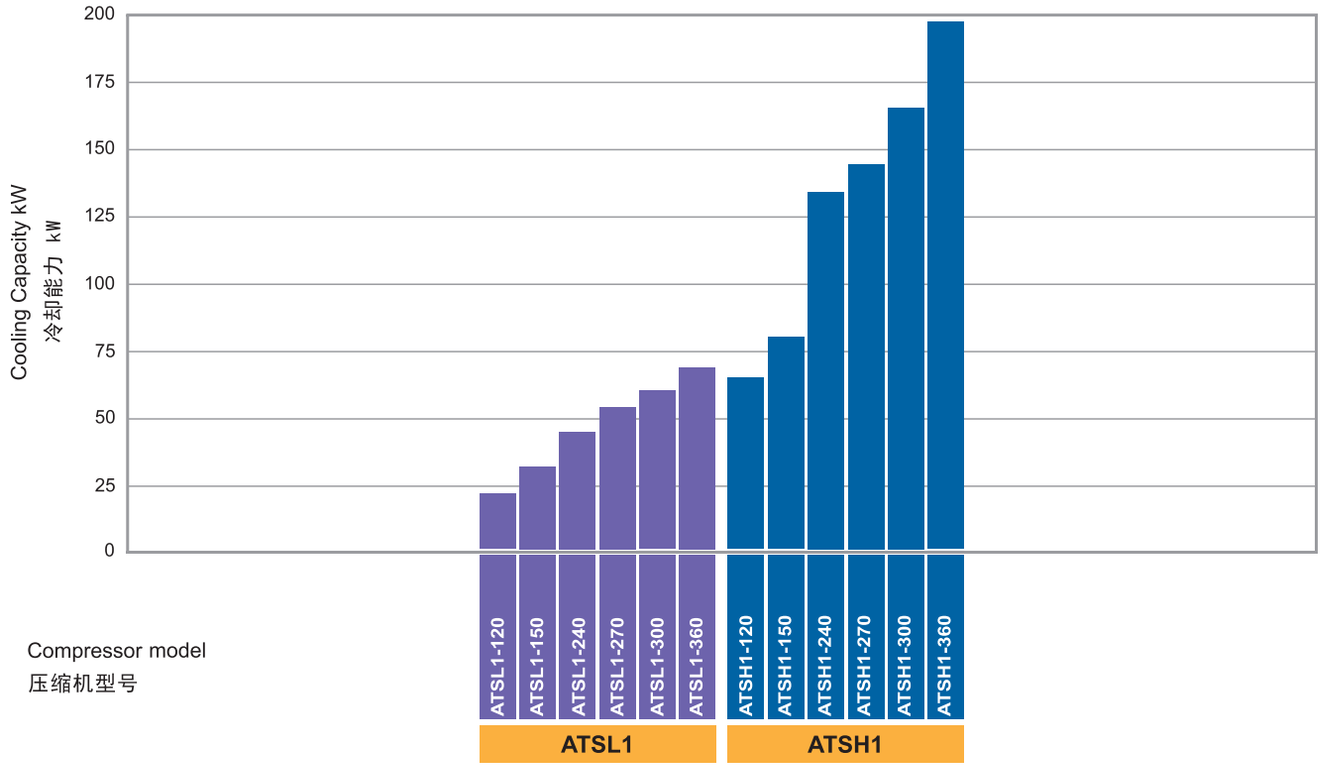

ATSL1: -35°C evaporating temperature; 40°C condensing temperature; 10K superheat; 0K liquid subcooling.
ATSH1: -10°C evaporating temperature; 45°C condensing temperature; 10K superheat; 0K liquid subcooling.
ATSL1：-35℃蒸发温度，40℃冷凝温度，10K吸气过热，0K液体过冷。
ATSH1：-10℃蒸发温度，45℃冷凝温度，10K吸气过热，0K液体过冷。

Working limits
运行限制

ATSL1/ATSH1 R22

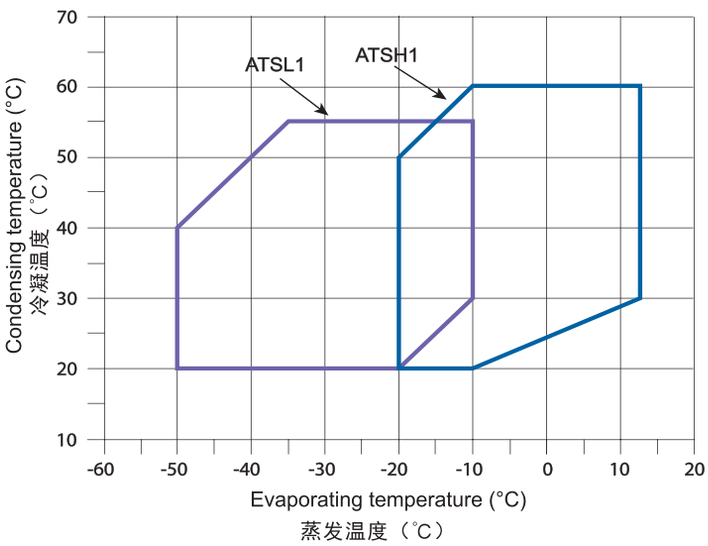

ATSL1/ATSH1 R407A/R407F

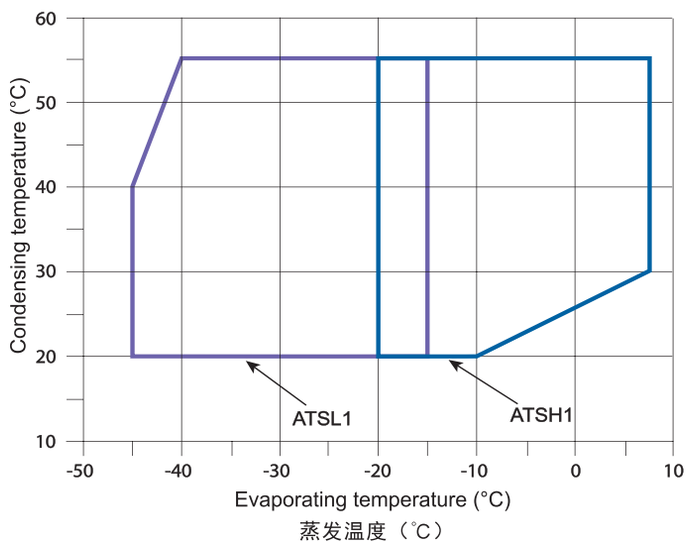

Full load operation (100%) - ATSL1
满负荷运行（100%）—ATSL1

Full load operation (100%) - ATSH1
满负荷运行（100%）—ATSH1

Suction gas superheating 10K - 0K liquid subcooling.
Additional cooling may be required, see selection software.
10K吸气过热，0K液体过冷。
可能需要额外冷却，参见选择软件。

ATSH1/L1- 120
ATSH1/L1- 150

Dimensional drawing
尺寸图

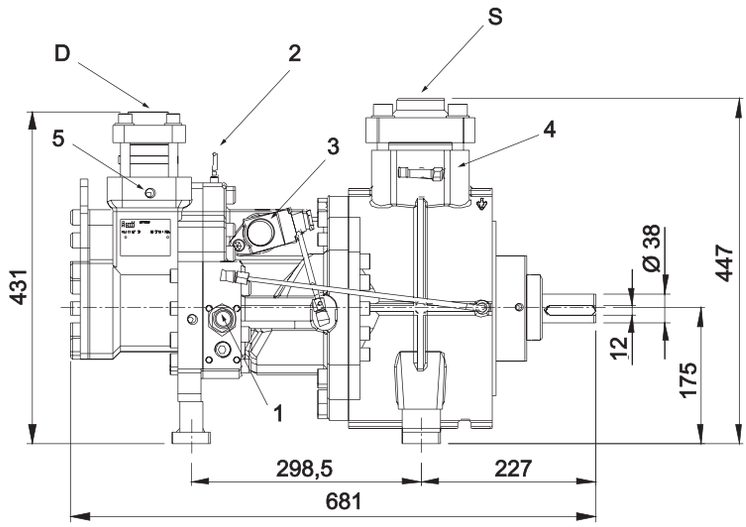

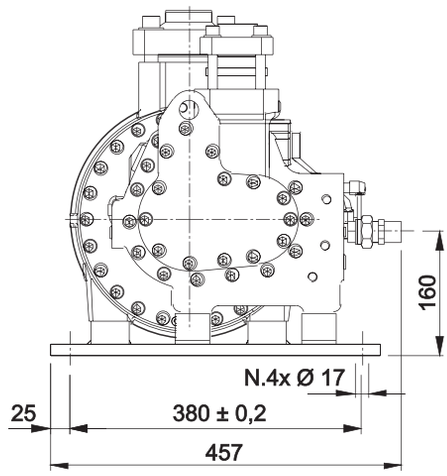

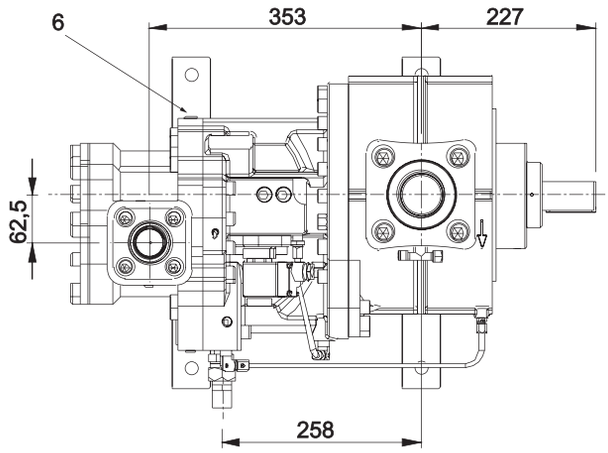

DRAWING NOTES 图纸注解		
1	Connection for oil return valve	喷油阀接口
2	Discharge temperature sensor	排气温度传感器
3	Capacity control valve	能量调节
4	Low pressure connection	低压接口
5	High pressure connection	高压接口
6	Liquid injection/economiser connection	喷液接口/经济器接口
S	Suction	吸气口
D	Discharge	排气口

ATSH1/L1- 240
ATSH1/L1- 270

Dimensional drawing
尺寸图

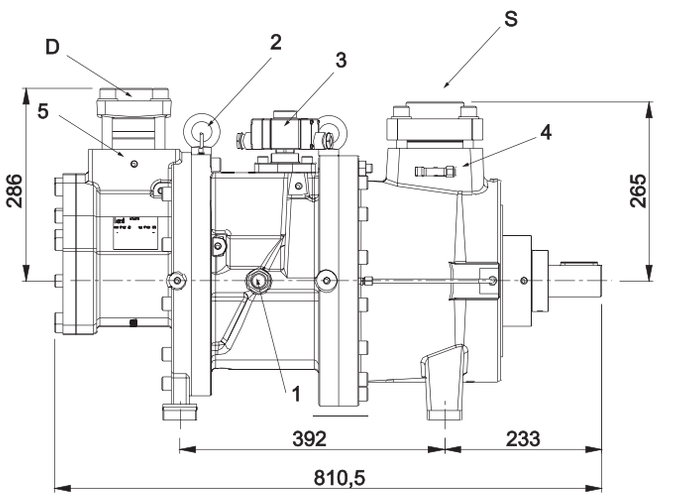

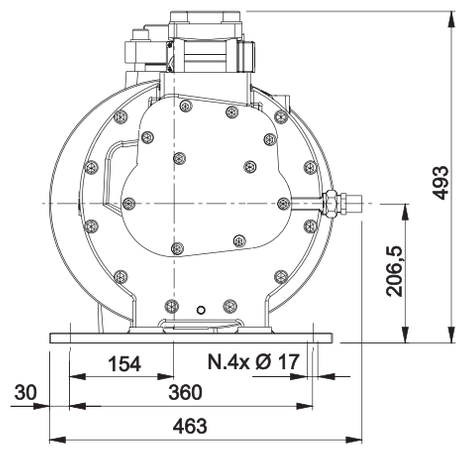

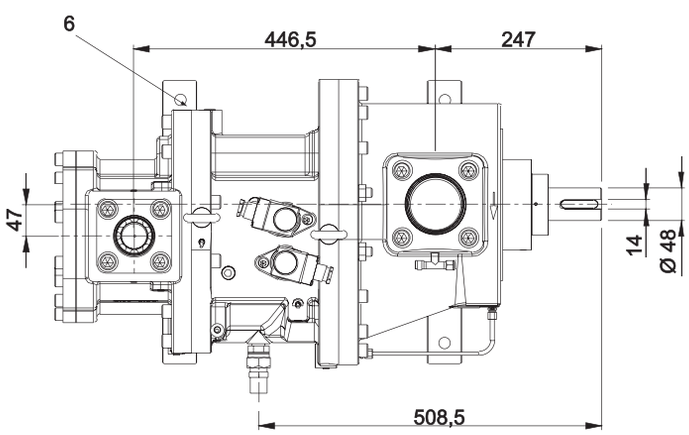

DRAWING NOTES 图纸注解		
1	Connection for oil return valve	喷油阀接口
2	Discharge temperature sensor	排气温度传感器
3	Capacity control valve	能量调节
4	Low pressure connection	低压接口
5	High pressure connection	高压接口
6	Liquid injection/economiser connection	喷液接口/经济器接口
S	Suction	吸气口
D	Discharge	排气口

ATSH1/L1- 300
ATSH1/L1- 360*

Dimensional drawing
尺寸图

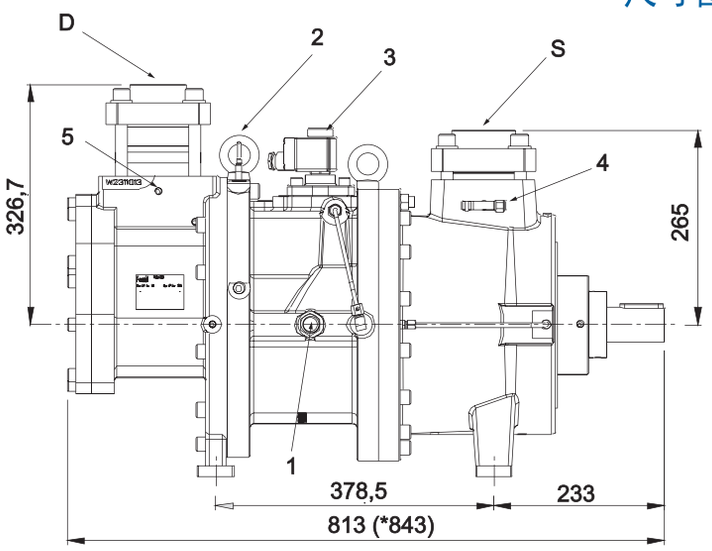

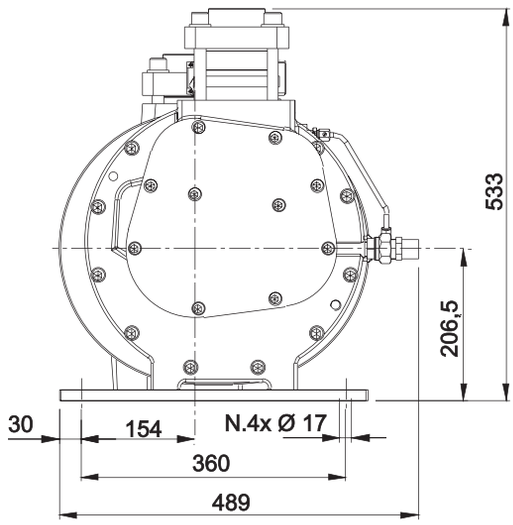

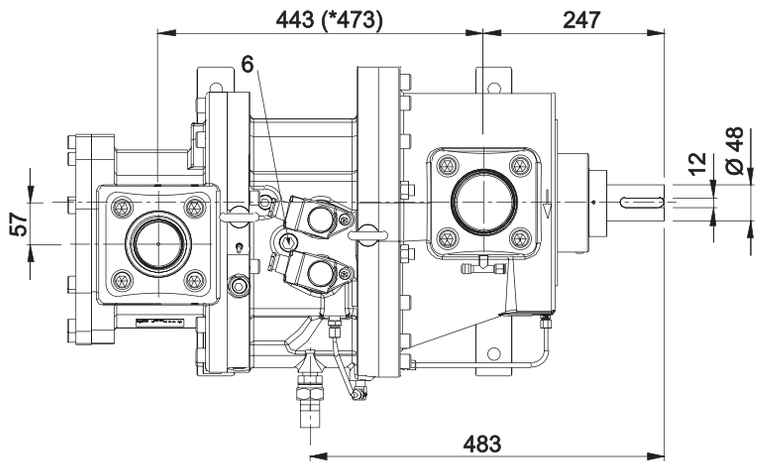

DRAWING NOTES 图纸注解		
1	Connection for oil return valve	喷油阀接口
2	Discharge temperature sensor	排气温度传感器
3	Capacity control valve	能量调节
4	Low pressure connection	低压接口
5	High pressure connection	高压接口
6	Liquid injection/economiser connection	喷液接口/经济器接口
S	Suction	吸气口
D	Discharge	排气口

COUPLING HOUSING
联轴器保护罩

Dimensional drawing
尺寸图

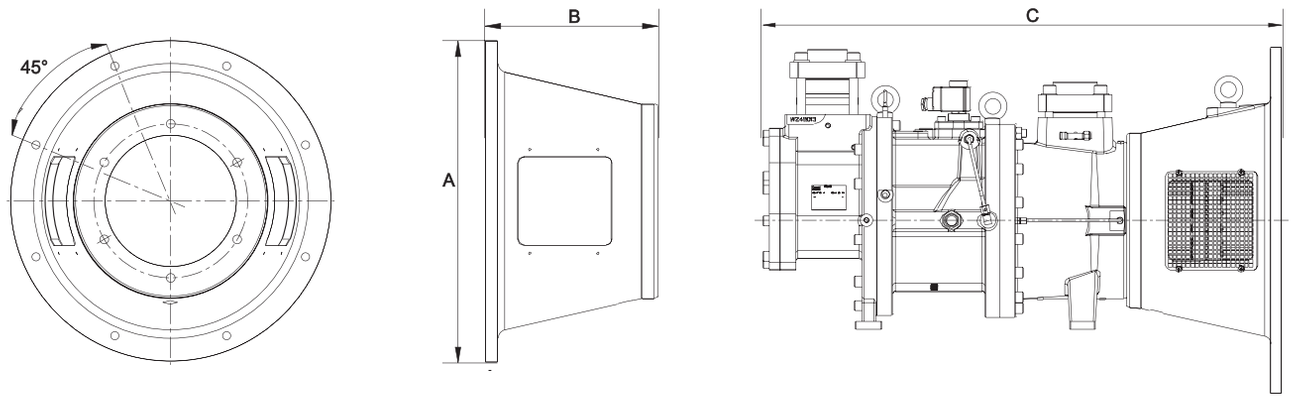

Compressor 压缩机	Motor (IEC Standard) 电机（IEC标准）	Weight Coupling 联轴器重量	Weight Coupling Housing 联轴器保护罩重量	Coupling Housing Dimension 保护罩尺寸	Coupling Housing Dimension 保护罩尺寸	Total Lenght Compressor with Coupling Housing 带有联轴器保护罩的压缩机总长度
	kW	kg	kg	B (mm)	A (mm)	C (mm)
ATSH1 - 120 ATSL1 - 120	18	10	22	250	350	796
	22	10	22	250	350	796
	30	11	26	250	400	796
	37	11	26	250	400	796
ATSH1 - 150 ATSL1 - 150	30	11	26	250	400	796
	37	11	26	250	400	796
	45	11	29	250	450	796
	55	11	47	296	550	842
ATSH1/L1 - 240 ATSH1/L1 - 270	55	15	47	296	550	958
	75	15	47	296	550	958
	90	15	47	296	550	958
ATSH1/L1 - 300	55	15	47	296	550	960
	75	15	47	296	550	960
	90	15	47	296	550	960
	110	15	60	296	660	960
	132	15	60	296	660	960
ATSH1/L1 - 360	55	15	47	296	550	990
	75	15	47	296	550	990
	90	15	47	296	550	990
	110	15	60	296	660	990
	132	15	60	296	660	990

Company with more than 75 years of experience that manufactures compressor for refrigeration and air conditioning industries. The great experience gained over the years provides cutting-edge products and solutions, in line with the latest market demand. Additional or different equipment and devices are meant to meet the peculiarity of each application worldwide, always paying specific attention to the energy saving and in full respect of the environment. Furthermore all quality and construction directives indicated by the relevant authorities are strictly followed.

富士豪是一家拥有75年以上的制冷与空调压缩机制造经验的公司，提供符合市场最新需求的尖端产品和解决方案。我们的产品范围广泛，可以满足全世界的具体应用和市场需求，始终关注节能和环保。严格遵守相关主管部门的所有质量和构造规定。

富特傲制冷设备（上海）有限公司

上海浦东新区张杨路3611弄

金桥国际商业广场6楼608室

Tel:+ 86 021 58650192

+ 86 021 58650180

Fax: + 86 021 58650180

E-mail：frascold.china@frascold.net

Website: www.frascold.it

Frascold Refrigeration (Shanghai) Co.,Ltd.

Address: Room 608, 6th Floor, Jinqiao Life Hub, No.3611 Zhangyang Road, New Pudong District, Shanghai, China.

Tel:+ 86 021 58650192

+ 86 021 58650180

Fax: + 86 021 58650180

E-mail：frascold.china@frascold.net

Website: www.frascold.it

FRASCOLD SpA

Via Barbara Melzi 103/105

20027 Rescaldina MI Italia

Tel: + 39-0331-742201

fax: + 39-0331-576102

E-mail: frascold@frascold.it

http://www.frascold.it